FOUR KEY TESTS: Validating MOSFET Performance in Power Supply Designs

TEST SPECIFICATIONS

Drain Family of Curves

Definition: Transistor output characteristics plotted as I_{DS} versus V_{DS} for several values of V_{GS}.
Measurement Parameter: I_{DS} vs. V_{DS}
Importance in Device Selection: By looking at these curves, the designer can determine the best operating point for the application. At low drain-source voltages, the MOSFET behaves like a variable resistance whose value is controlled by the applied gate-source voltage. At higher drain-source voltages, the MOSFET passes a current whose value depends on the applied gate-source voltage. In most circuits, it is used in this 'high voltage' region and acts as a voltage-controlled current source.

Test Technique:

1. Step the gate voltage (V_{GS}) across the desired range of values at specified increments.
2. At each V_{GS} value, V_{DS} is swept across the desired V_{DS} range.
3. Measure the drain-source current (I_{DS}) at each V_{DS} increment.

Threshold Voltage

Definition: The minimum gate-to-source voltage differential required to produce current flow from the source to drain.
Measurement Parameter: V_{TH}
Importance in Device Selection: Threshold voltage is important for determining the on-state and the off-state of the MOSFET. $V_{GS(th)}$ is defined where $V_{DS} = V_{GS}$, although it is sometimes quoted for a fixed V_{DS} (e.g. 10 V.)

Test Technique:

1. Sweep the gate voltage (V_{GS}) while the drain-source voltage (V_{DS}) is set to a particular value.
2. Measure the drain current (I_D) at each value incremental of V_{GS} in the sweep.
3. Determine the threshold voltage (V_{TH}) through a linear curve fit. A linear region on the curve is selected. The interception of the voltage axis gives the threshold voltage.

Gate Leakage

Definition: Transistor gate leakage current as a function of the gate voltage.
Measurement Parameter: I_G vs. V_G
Importance in Device Selection: The gate leakage current is important when calculating how much current is required to keep the device turned on. Because it is a leakage current through an insulator, this current is independent of temperature.

Test Technique:

1. Sweep the gate voltage (V_G) over the desired range while the drain and source are tied to common.
2. Measure the gate current (I_G).

Transconductance

Definition: The change in the drain current divided by the small change in the gate/source voltage with a constant drain/source voltage.
Measurement Parameter: I_D vs. V_{GS}
Importance in Device Selection: Transconductance helps the engineer to choose the best MOSFET with the right amount of gain (amplification) for the designs.

Test Technique:

1. Sweep the gate voltage (V_{GS}) over the desired range, while maintaining a constant drain/source voltage (V_{DS}.)
2. Measure the drain current (I_D) at each increment step of V_{GS}.
3. Calculate transconductance (g_m) by dividing the small changes in I_D by the small changes in VGS. $g_m = \Delta I_D / \Delta V_{GS}$.

TEST CONFIGURATION

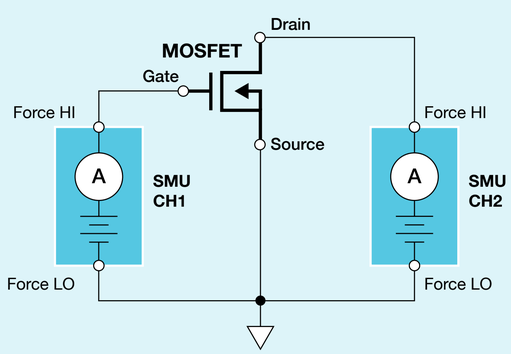

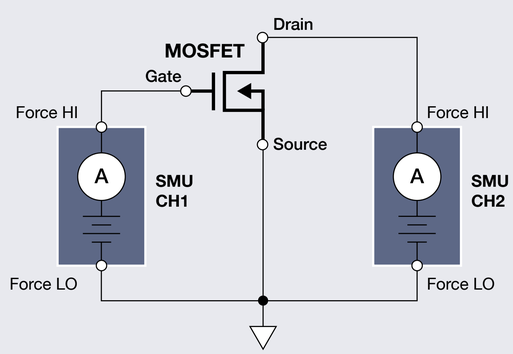

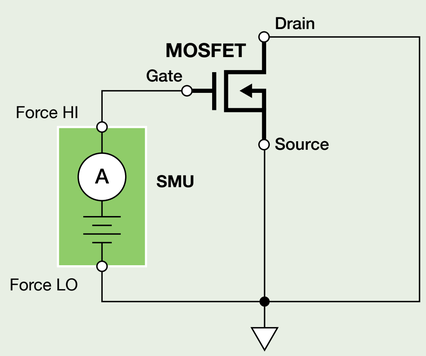

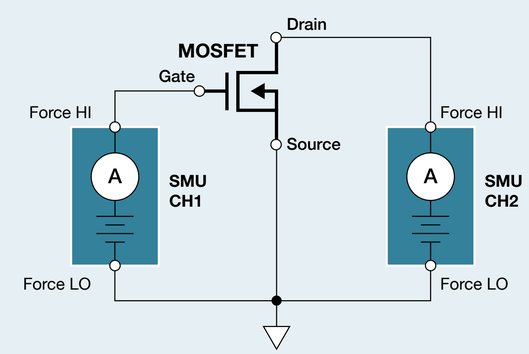

TYPICAL RESULTS

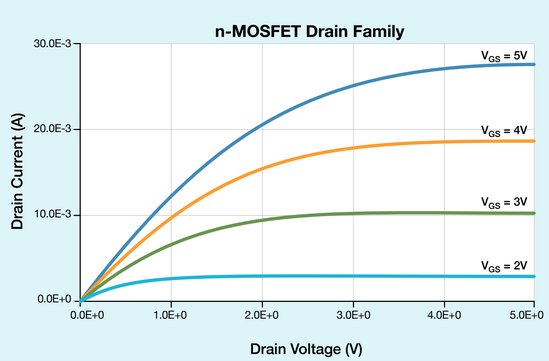

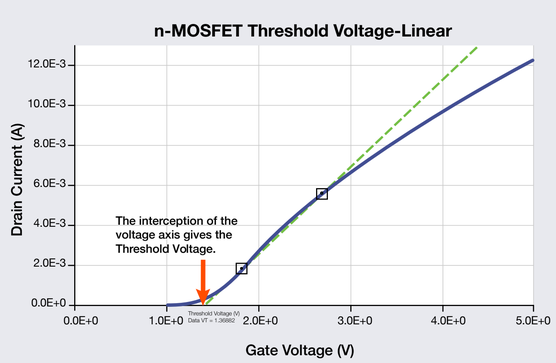

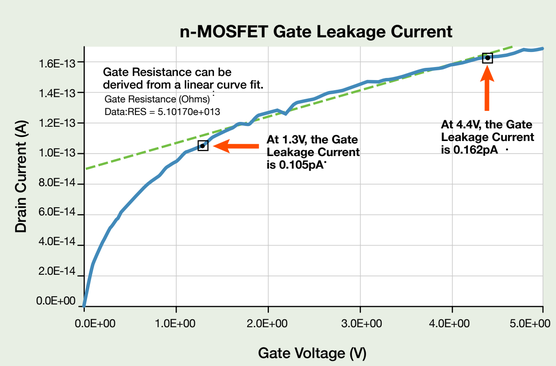

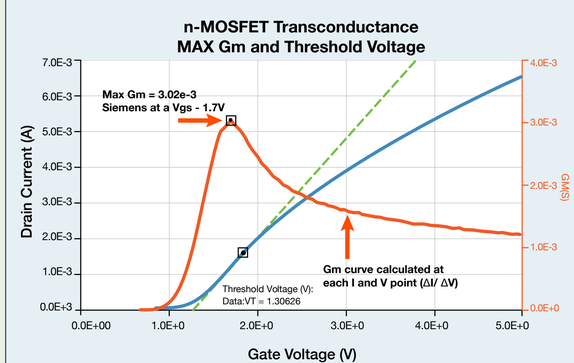

S J ELECTRONICS
POWER • TEST & MEASUREMENT
0800 583 4455
sales@sjelectronics.co.uk
VISIT WEBSITE
Tektronix®

Contact Information:

Australia* 1 800 709 465
Austria 00800 2255 4835
Balkans, Israel, South Africa and other ISE Countries +41 52 675 3777
Belgium* 00800 2255 4835
Brazil +55 (11) 3759 7627
Canada 1 800 833 9200
Central East Europe / Baltics +41 52 675 3777
Central Europe / Greece +41 52 675 3777
Denmark +45 80 88 1401
Finland +41 52 675 3777
France* 00800 2255 4835
Germany* 00800 2255 4835
Hong Kong 400 820 5835
India 000 800 650 1835
Indonesia 007 803 601 5249
Italy 00800 2255 4835
Japan 81 (3) 6714 3010
Luxembourg +41 52 675 3777
Malaysia 1 800 22 55835
Mexico, Central/South America and Caribbean 52 (55) 56 04 50 90
Middle East, Asia, and North Africa +41 52 675 3777
The Netherlands* 00800 2255 4835
New Zealand 0800 800 238
Norway 800 16098
People's Republic of China 400 820 5835
Philippines 1 800 1601 0077
Poland +41 52 675 3777
Portugal 80 08 12370
Republic of Korea +82 2 6917 5000
Russia / CIS +7 (495) 6647564
Singapore 800 6011 473
South Africa +41 52 675 3777
Spain* 00800 2255 4835
Sweden* 00800 2255 4835
Switzerland* 00800 2255 4835
Taiwan 886 (2) 2656 6688
Thailand 1 800 011 931
United Kingdom / Ireland* 00800 2255 4835
USA 1 800 833 9200
Vietnam 12060128

*** European toll-free number. If not accessible, call:** +41 52 675 3777

Find more valuable resources at TEK.COM

Copyright © Tektronix. All rights reserved. Tektronix products are covered by U.S. and foreign patents, issued and pending. Information in this publication supersedes that in all previously published material. Specification and price change privileges reserved. TEKTRONIX and TEK are registered trademarks of Tektronix, Inc. All other trade names referenced are the service marks, trademarks or registered trademarks of their respective companies.
03.30.16 KI 1KW-60515-0

Four Key Tests for Validating MOSFET Performance in Power Supply Designs

POSTER

Tektronix